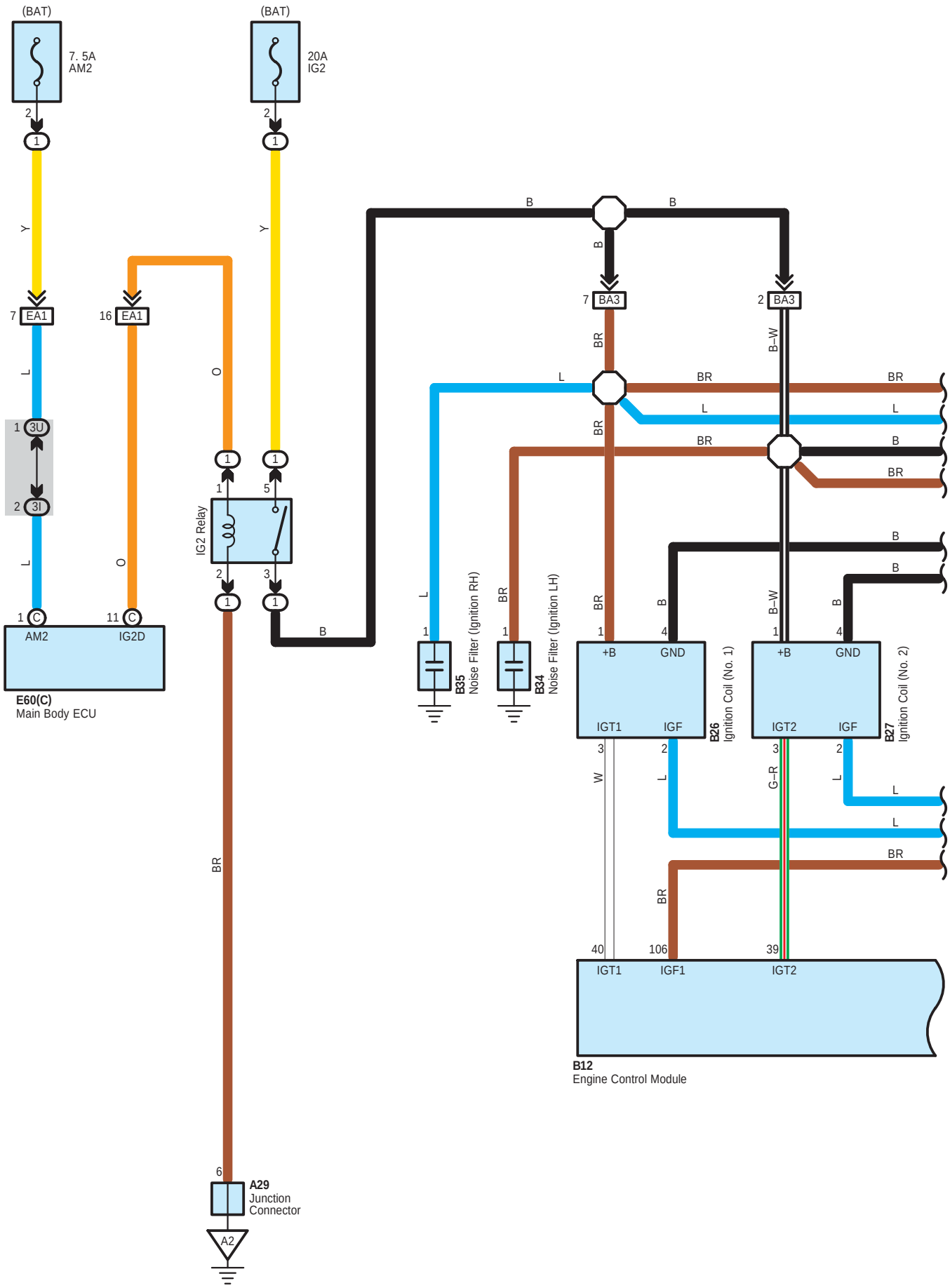
(BAT)
7. 5A
AM2
(BAT)
20A
IG2
7 EA1
16 EA1
1 3U
2 3I
1 C
AM2
11 C
IG2D
E60(C)
Main Body ECU
IG2 Relay
7 BA3
2 BA3
B35
Noise Filter (Ignition RH)
B34
Noise Filter (Ignition LH)
+B
GND
IGT1
IGF
B26
Ignition Coil (No. 1)
+B
GND
IGT2
IGF
B27
Ignition Coil (No. 2)
IGT1
IGF1
IGT2
B12
Engine Control Module
A29
Junction
Connector
A2

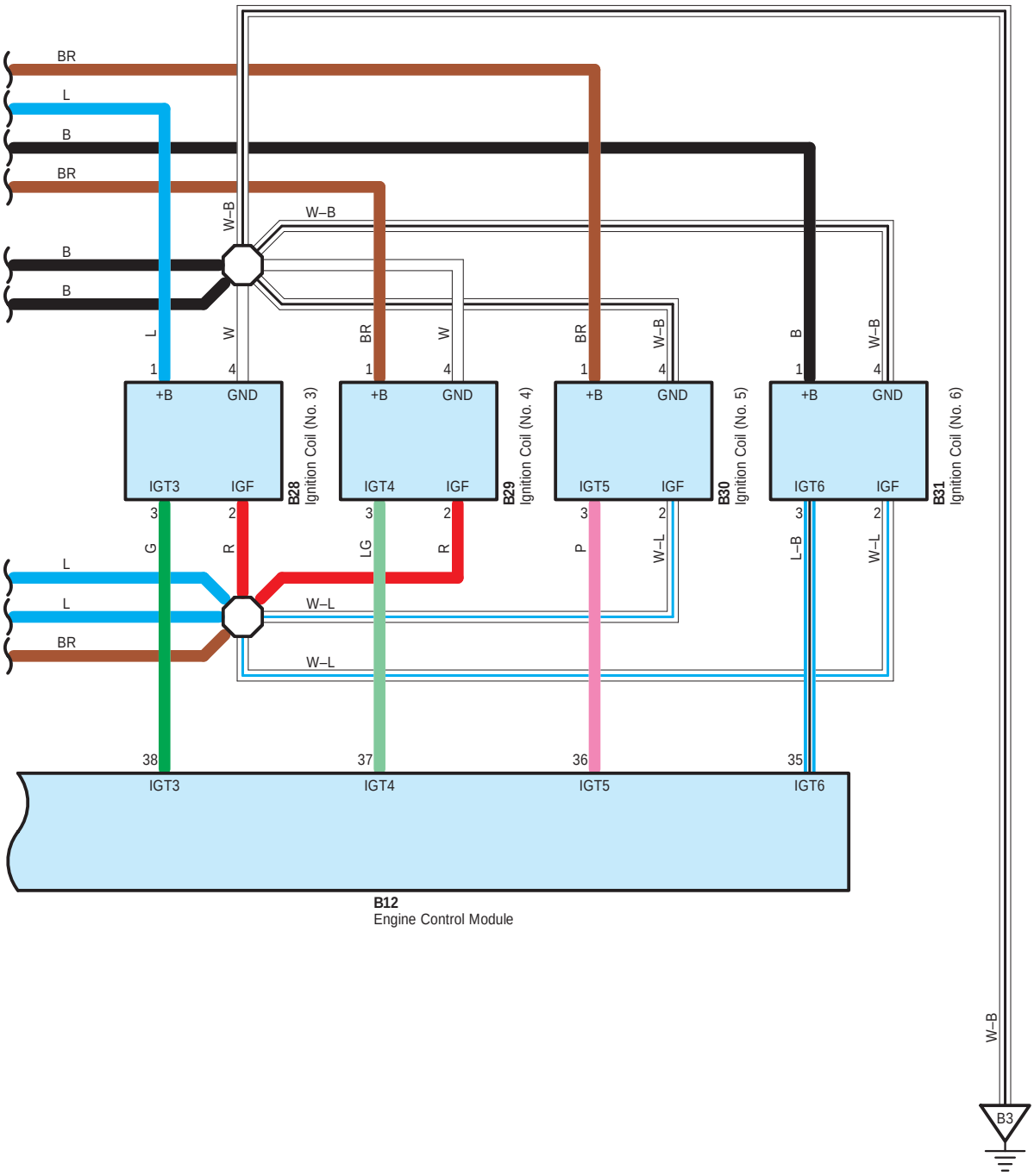
BR
L
B
BR
B
B
W–B
W–B
L
W
BR
W
BR
W–B
B
W–B
1
4
1
4
1
4
1
4
+B
GND
+B
GND
+B
GND
+B
GND
IGT3
IGF
IGT4
IGF
IGT5
IGF
IGT6
IGF
B28
Ignition Coil (No. 3)
B29
Ignition Coil (No. 4)
B30
Ignition Coil (No. 5)
B31
Ignition Coil (No. 6)
3
2
3
2
3
2
3
2
G
R
LG
R
P
W–L
L–B
W–L
L
L
BR
W–L
W–L
38
37
36
35
IGT3
IGT4
IGT5
IGT6
B12
Engine Control Module
W–B
B3

○ : **Parts Location**

Code	See Page	Code	See Page	Code		See Page
A29	54	B28	57	B34		57
B12	56	B29	57	B35		57
B26	57	B30	57	E60	C	59
B27	57	B31	57			

▭ : **Relay Blocks**

Code	See Page	Relay Blocks (Relay Block Location)
1	22	Engine Room R/B (Engine Compartment Left)

▭ : **Junction Block and Wire Harness Connector**

Code	See Page	Junction Block and Wire Harness (Connector Location)
3I	36	Instrument Panel Wire and J/B No.3 (Instrument Panel Left)
3U		

▭ : **Connector Joining Wire Harness and Wire Harness**

Code	See Page	Joining Wire Harness and Wire Harness (Connector Location)
BA3	68	Engine Wire and Engine Room Main Wire (Inside of the Engine Room R/B and Engine Room J/B)
EA1	69	Instrument Panel Wire and Engine Room Main Wire (Left Kick Panel)

▽ : **Ground Points**

Code	See Page	Ground Points Location
A2	68	Front Left Fender Apron
B3	68	Right Side of the Cylinder Block